DTC	P2419	Evaporative Emission System Switching Valve Control Circuit Low

DTC	P2420	Evaporative Emission System Switching Valve Control Circuit High

DTC SUMMARY

DTCs	Monitoring Items	Malfunction Detection Conditions	Trouble Areas	Detection Timings	Detection Logic
P2419	Vent valve stuck closed	P043E, P043F, P2401, P2402 and P2419 present when one of following conditions met during key-off EVAP monitor: • EVAP pressure just after reference pressure measurement greater than -1 kPa-g (-7.5 mmHg-g) • Reference pressure less than -4.85 kPa-g (-36.4 mmHg-g) • Reference pressure greater than -1.057 kPa-g (-7.93 mmHg-g) • Reference pressure not saturated • Reference pressure difference between first and second 0.7 kPa-g (5.25 mmHg-g) or more HINT: Typical example values	• Canister pump module (Reference orifice, leak detection pump, vent valve) • Connector/wire harness (Canister pump module - ECM) • EVAP system hose (pipe from air inlet port to canister pump module, canister filter, fuel tank vent hose) • ECM	While ignition switch OFF	2 trip
P2420	Vent valve stuck open (vent)	Following condition met during key-off EVAP monitor: • EVAP pressure change when vent valve closed (ON) less than 0.3 kPa-g (2.25 mmHg-g)	• Canister pump module (Reference orifice, leak detection pump, vent valve) • Connector/wire harness (Canister pump module - ECM) • ECM	While ignition switch OFF	2 trip

HINT:
The vent valve is built into the canister pump module.

DESCRIPTION

The circuit description can be found in the EVAP (Evaporative Emission) System (See page ES-341).

INSPECTION PROCEDURE

Refer to the EVAP System (See page ES-346).

MONITOR DESCRIPTION

5 hours* after the ignition switch is turned to OFF, the leak detection pump creates negative pressure (vacuum) in the EVAP system. The ECM monitors for leaks and actuator malfunctions based on the EVAP pressure.
HINT:
*: If the engine coolant temperature is not below 35°C (95°F) 5 hours after the ignition switch is turned to OFF, the monitor check starts 2 hours later. If it is still not below 35°C (95°F) 7 hours after the ignition switch is turned to OFF, the monitor check starts 2.5 hours later.

Sequence	Operations	Descriptions	Duration
-	ECM activation	Activated by soak timer, 5 hours (7 or 9.5 hours) after ignition switch turned to OFF.	-

cardiagn.com

Sequence	Operations	Descriptions	Duration
A	Atmospheric pressure measurement	Vent valve turned OFF (vent) and EVAP system pressure measured by ECM in order to register atmospheric pressure. If pressure in EVAP system not between 76 kPa-a and 110 kPa-a (570 mmHg-a and 825 mmHg-a), ECM cancels EVAP system monitor.	10 seconds
B	First reference pressure measurement	In order to determine reference pressure, leak detection pump creates negative pressure (vacuum) through reference orifice and then ECM checks if leak detection pump and vent valve operate normally.	60 seconds
C	EVAP system pressure measurement	Vent valve turned ON (closed) to shut EVAP system. Negative pressure (vacuum) created in EVAP system, and EVAP system pressure then measured. Write down measured value as will be used in leak check. If EVAP pressure does not stabilize within 15 minutes, ECM cancels EVAP system monitor.	15 minutes*
D	Purge VSV monitor	Purge VSV opened and then EVAP system pressure measured by ECM. Large increase indicates normality.	10 seconds
E	Second reference pressure measurement	After second reference pressure measurement, leak check performed by comparing first and second reference pressure. If stabilized system pressure higher than second reference pressure, ECM determines that EVAP system leaking.	60 seconds
F	Final check	Atmospheric pressure measured and then monitoring result recorded by ECM.	-

* If only a small amount of fuel is in the fuel tank, it takes longer for the EVAP pressure to stabilize.

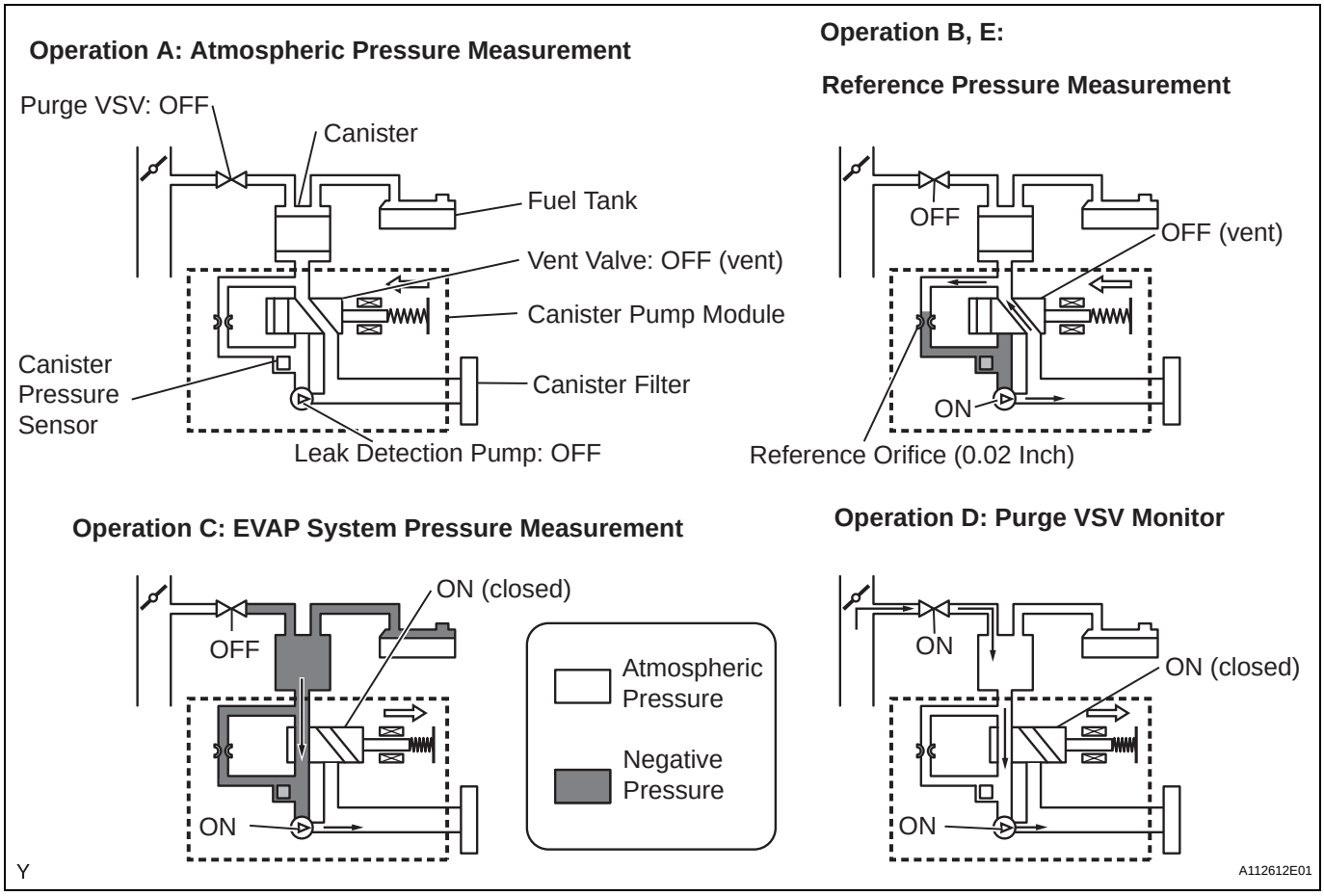

cardiagn.com

1. P2419: Vent valve stuck closed
   In operation B, the leak detection pump creates negative pressure (a vacuum) through the reference orifice. The EVAP system pressure is then measured by the ECM, using the canister pressure sensor, to determine the reference pressure. If the pressure exceeds -1.057 kPa-g (-7.93 mmHg-g) 4 seconds after the leak detection pump is turned ON, the ECM interprets this as the vent valve being stuck closed.
   The ECM illuminates the MIL and sets the DTC (2 trip detection logic).

EVAP Pressure when Vent Valve Stuck ON:

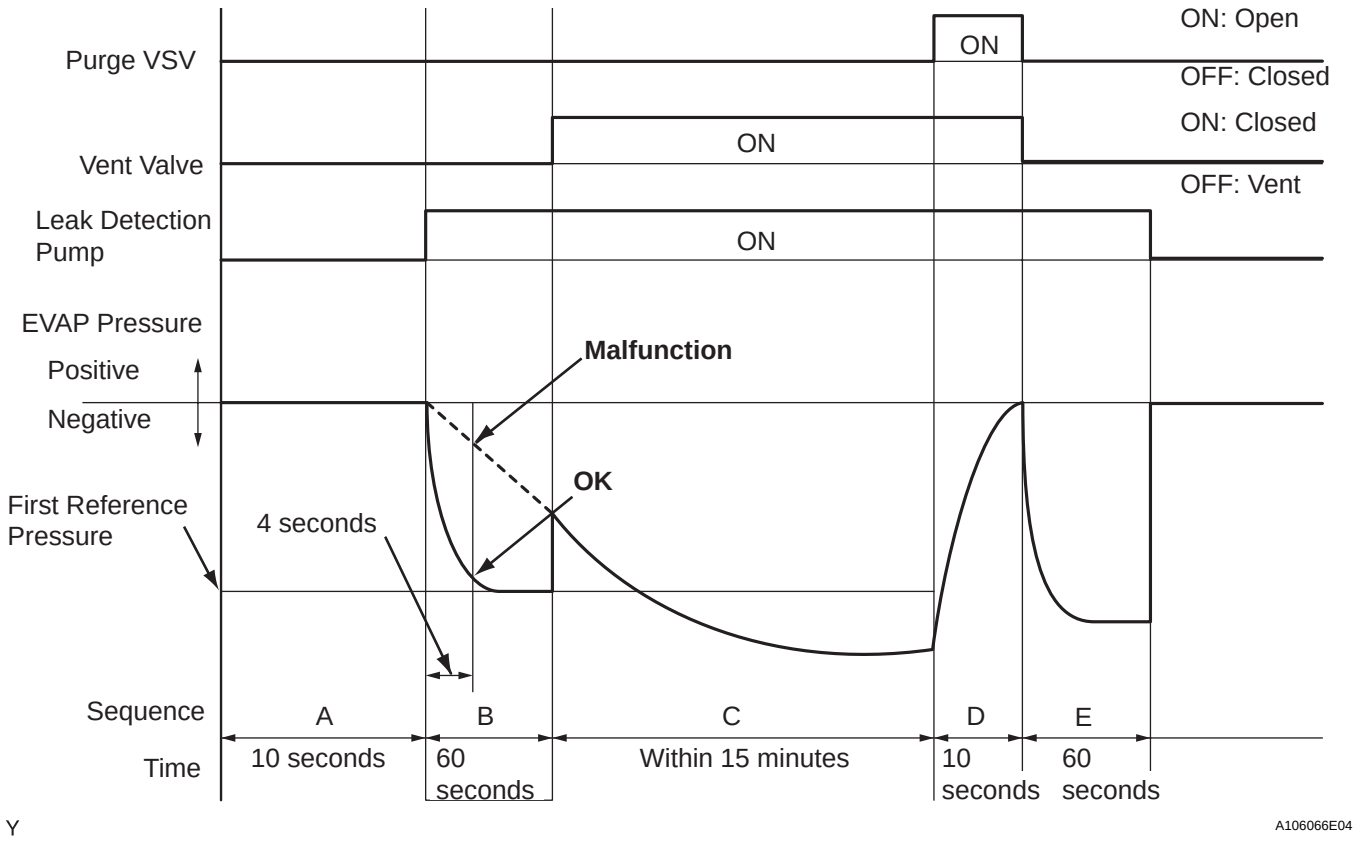

ES
cardiagn.com

2. P2420: Vent valve stuck open (vent)
   In operation C, the vent valve turns ON (closes) and the EVAP system pressure is then measured by the ECM, using the canister pressure sensor, to conduct an EVAP leak check. If the pressure does not increase when the vent valve is open, the ECM interprets this as the vent valve being stuck open. The ECM illuminates the MIL and sets the DTC.

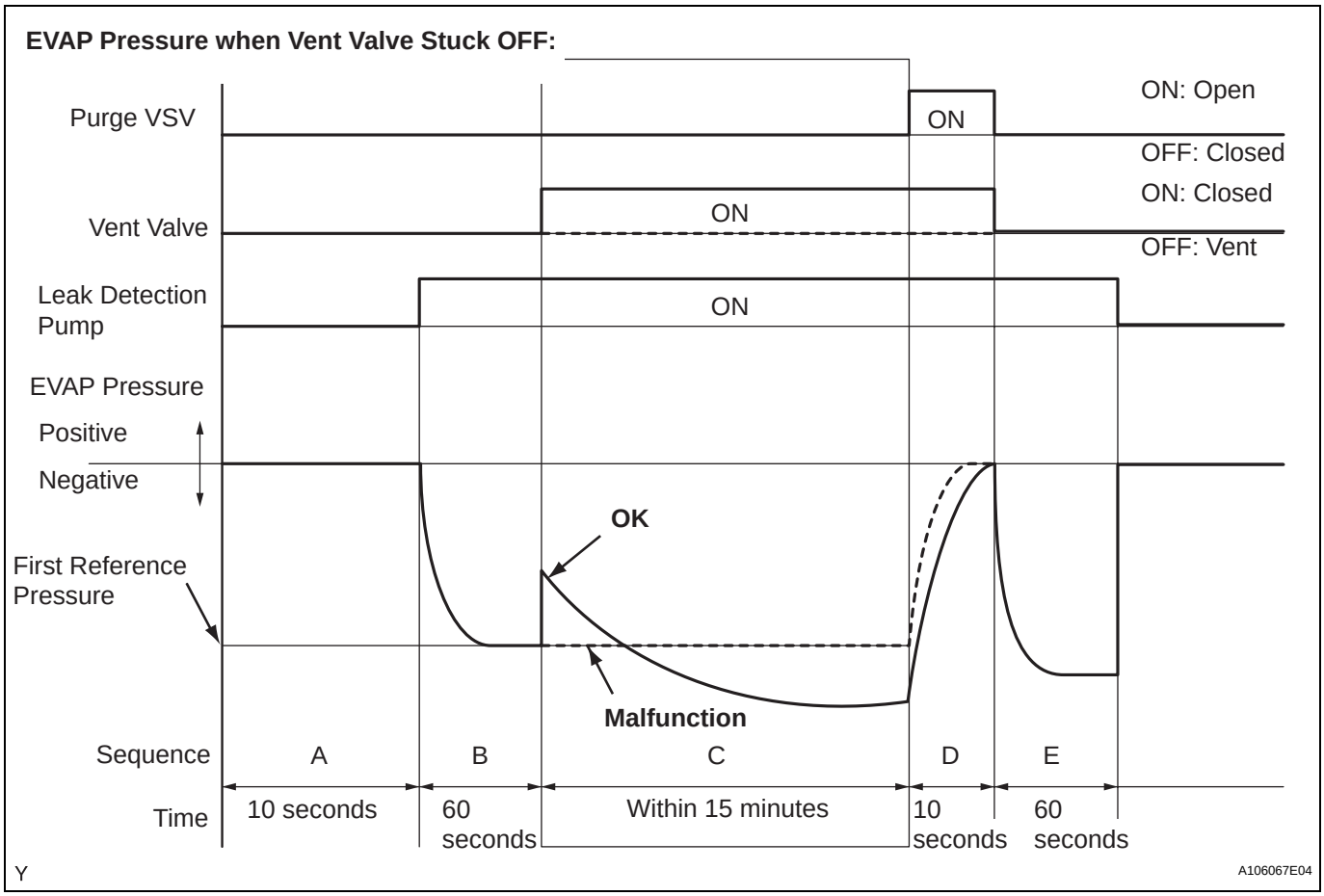

OBD II MONITOR SPECIFICATIONS

MONITOR STRATEGY

Related DTCs	P2419: Vent valve stuck open P2420: Vent valve stuck closed
Required Sensors/Components	Purge VSV and pump module
Frequency of Operation	Once per driving cycle
Duration	Within 12 minutes (varies with amount of fuel in tank)
MIL Operation	2 driving cycles
Sequence of Operation	None

TYPICAL ENABLING CONDITIONS

All:

The monitor will run whenever the following DTCs are not present	None

Enable conditions of EVAP key-off monitor

Atmospheric pressure	70 to 110 kPa (525 to 825 mmHg) [absolute pressure]
Battery voltage	10.5 V or more
Vehicle speed	2.5 mph (4 km/h) or less

cardiagn.com

Ignition switch	OFF
Time after key off	5 hours
EVAP pressure sensor malfunction (P0450, P0452, P0453)	Not detected
EVAP canister purge valve	Not operated by scan tool
EVAP canister vent valve	Not operated by scan tool
EVAP leak detection pump	Not operated by scan tool
Both of the following conditions set before key off	Conditions 1 and 2
1. Duration that vehicle has been driven	5 minutes or more
2. EVAP purge operation	Performed
ECT	4.4 to 35°C (40 to 95°F)
IAT	4.4 to 35°C (40 to 95°F)

EVAP key-off monitor sequence 1 to 8

1. Atmospheric pressure measurement

Next sequence is run if the following condition is met:	-
Atmospheric pressure change for 10 seconds	Within 0.3 kPa (2.25 mmHg) in 1 second

2. Reference pressure measurement

Next sequence is run if the following conditions are met:	-
EVAP pressure just after reference pressure measurement start	-1 kPa (-7.5 mmHg) or less
Reference pressure	-4.5 to -1 kPa (-33.75 to -7.5 mmHg)
Reference pressure	Saturated within 60 seconds

3. EVAP canister vent valve close stuck check

Next sequence is run if the following condition is met:	-
EVAP pressure change after vent valve is ON	0.3 kPa (2.25 mmHg) or more

4. Vacuum introduction and EVAP leak check

Next sequence is run if the following condition is met:	-
EVAP pressure	Saturated within 12 minutes

5. EVAP canister purge valve close stuck check

Next sequence is run if the following condition is met:	-
EVAP pressure change after purge valve is open	0.3 kPa (2.25 mmHg) or more

6. Atmospheric pressure measurement

Next sequence run if all of following conditions set:	Condition 1, 2, 3 and 4
1. EVAP pressure just after reference pressure	-1 kPa-g (-7.5 mmHg-g) or less
2. Reference pressure	-4.85 to -1.057 kPa-g (-36.4 to -7.93 mmHg-g)
3. Reference pressure	Saturated within 60 seconds
4. Reference pressure difference between first and second	Less than 0.7 kPa-g (5.25 mmHg-g)

7. Leak check

Next sequence run if following condition is met:	-
EVAP pressure change after purge valve is open	0.3 kPa (2.25 mmHg) or more

8. Atmospheric pressure measurement

EVAP monitor is complete if following condition is met:	-
Atmospheric pressure difference between sequence 1 and 8	Within 0.3 kPa-g (2.25 mmHg-g)

cardiagn.com

TYPICAL MALFUNCTION THRESHOLDS

1. P2419: Vent valve stuck ON (Closed)

One of following conditions is met	-
EVAP pressure when reference pressure measurement started	-1 kPa (7.5 mmHg) or higher
Reference pressure (0.02 inch leak pressure)	Lower than -4.3 kPa (-32 mmHg)
Reference pressure (0.02 inch leak pressure)	-1.2 kPa (-9 mmHg) or higher
Reference pressure (0.02 inch leak pressure)	Not saturated for 60 seconds

2. P2420: Vent valve stuck OFF (Vent)

EVAP pressure change when vent valve turned ON after measurement of 0.02 inch leak pressure	Less than 0.3 kPa (2.25 mmHg)

MONITOR RESULT

Refer to EVAP System (See page ES-339).

cardiagn.com

DTC	P2610	ECM / PCM Internal Engine Off Timer Performance

DTC SUMMARY

DTC	Monitoring Items	Malfunction Detection Conditions	Trouble Areas	Detection Timings	Detection Logic
P2610	Soak timer (built into ECM)	ECM internal malfunction	ECM	Engine running	2 trip

DESCRIPTION

To ensure the accuracy of the EVAP (Evaporative Emission) monitor values, the soak timer, which is built into the ECM, measures 5 hours (+- 15 minutes) from when the ignition switch is turned to OFF, before the monitor is run. This allows the fuel to cool down, which stabilizes the Fuel Tank Pressure (FTP). When 5 hours have elapsed, the ECM turns on.

Soak Timer Circuit:

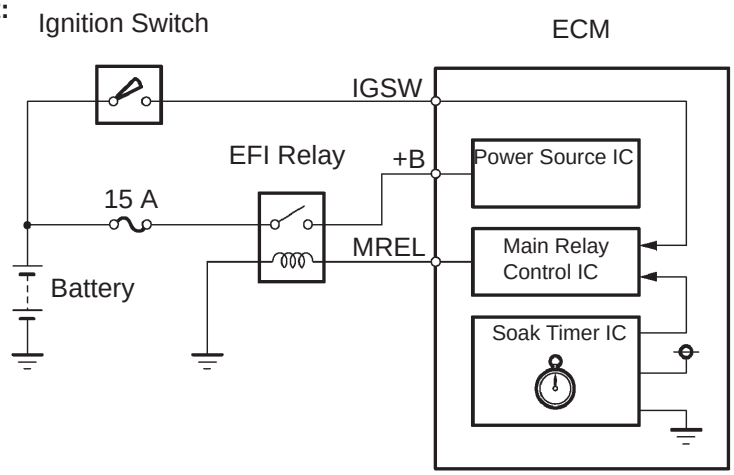

MONITOR DESCRIPTION

5 hours after the ignition switch is turned to OFF, the soak timer activates the ECM to begin the EVAP system monitor. While the engine is running, the ECM monitors the synchronization of the soak timer and the CPU clock. If these two are not synchronized, the ECM interprets this as a malfunction, illuminates the MIL and sets the DTC (2 trip detection logic).

OBD II MONITOR SPECIFICATIONS

MONITOR STRATEGY

Related DTC	P2610: Soak timer (built into ECM)
Required Sensors/Components	ECM
Frequency of Operation	Once per driving cycle
Duration	10 minutes
MIL Operation	2 driving cycles
Sequence of Operation	None

cardiagn.com

TYPICAL ENABLING CONDITIONS

All:

The monitor will run whenever the following DTCs are not present	None

Case 1:

Engine	Running
Battery voltage	8 V or more
Ignition switch	ON
Starter	OFF

Case 2:

Soak time	15 to 300 minutes or more
Battery voltage	8 V or more
Ignition switch	ON
Starter	OFF

Case 3:

Soak time	300 minutes or more
Battery voltage	8 V or more
Ignition switch	ON
Starter	OFF

TYPICAL MALFUNCTION THRESHOLDS

Case 1:

Soak timer measurement when ECM CPU clock counts 10 minutes	Less than 7 minutes or more than 13 minutes

Case 2:

History ECM had woken up by internal engine off timer	Yes
How long vehicle has been soaked	Less than programmed period

Case 3:

History ECM had woken up by internal engine off timer	No
How long vehicle has been soaked	More than or equal to programmed period

INSPECTION PROCEDURE

HINT:

- DTC P2610 is set if an internal ECM problem is detected. Diagnostic procedures are not required. ECM replacement is required.
- Read freeze frame data using an intelligent tester or OBD II scan tool. The ECM records vehicle and driving condition information as freeze frame data the moment a DTC is stored. When troubleshooting, freeze frame data can be helpful in determining whether the vehicle was running or stopped, whether the engine was warmed up or not, whether the air/fuel ratio was lean or rich, as well as other data recorded at the time of a malfunction.

1	REPLACE ECM

(a) Replace the ECM (See page ES-407).

NEXT

cardiagn.com

2	CHECK FOR WHETHER DTC OUTPUT RECURS

(a) Connect an intelligent tester to the DLC3.
(b) Turn the ignition switch to ON.
(c) Clear DTCs (See page ES-30).
(d) Start the engine and wait for 10 minutes or more.
(e) On the tester, select the following menu items: DIAGNOSIS / ENHANCED OBD II / DTC INFO / PENDING CODES.
(f) If no pending DTC is displayed, the repair has been successfully completed.
OK:
No DTC output.

NG → **CHECK INTERMITTENT PROBLEMS**

OK

END

cardiagn.com